INSET GLASS DOOR HINGE

NO SCREW

XL-GH03-48-0

- Medium size hinge for glass/acrylic doors.
- Door thickness: 5~8 mm
- Door size: Max. W650 × H900 × t8 mm (W25-19/32" × H35-7/16" × t5/16")
- Door weight: Max. 12 kg/pair (26.4 lbs/pair)

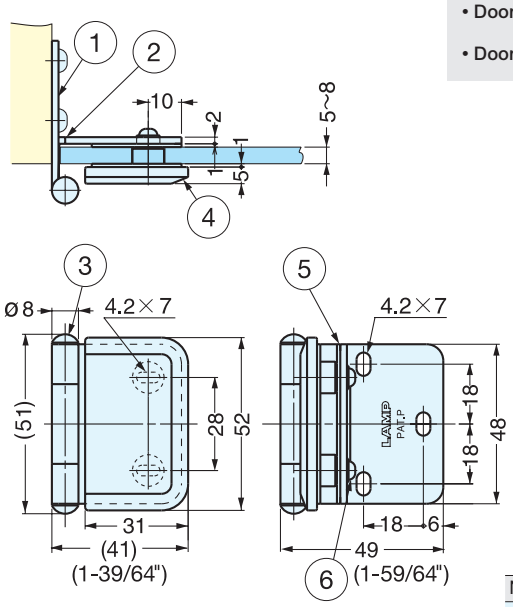

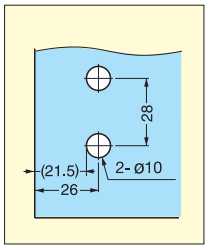

Cut Out Dimension

Item No.	Weight (g)	Box (pcs)	Carton (pcs)
XL-GH03-48-0CR	129	10	100

No.	Part Name	Material	Finish
①	Body	304 Stainless Steel	Mirror
②	Arm		
③	Hinge Pin		Plain
④	Plate	Zinc Alloy	Chrome
⑤	Pad	Polyethylene	Natural
⑥	Screw	304 Stainless Steel	-

HALF OVERLAY GLASS DOOR HINGE

NO SCREW

XL-GH03-48-8

- Half overlay (8 mm, 5/16") medium size hinge for glass/acrylic doors.
- Door thickness: 5~8 mm
- Door size: Max. W650 × H900 × t8 mm (W25-19/32" × H35-7/16" × t5/16")
- Door weight: Max. 12 kg/pair (26.4 lbs/pair)

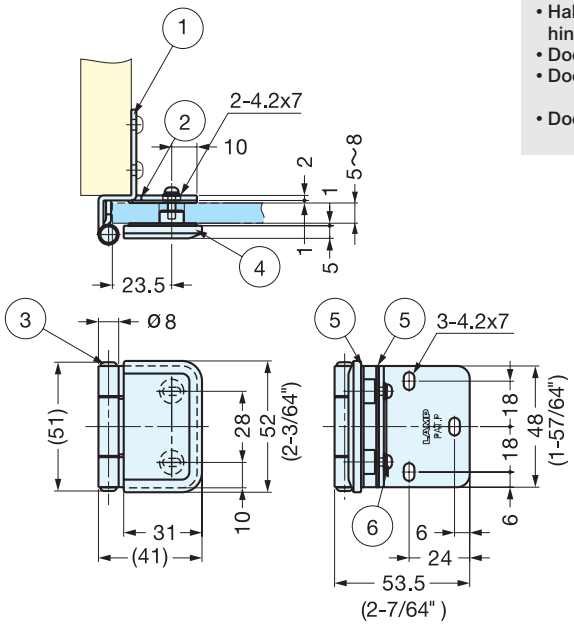

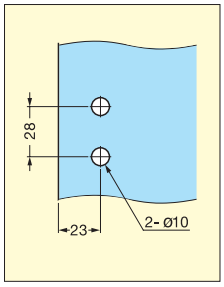

Cut Out Dimension

Item No.	Weight (g)	Box (pcs)	Carton (pcs)
XL-GH03-48-8CR	129	10	100

No.	Part Name	Material	Finish
①	Body	304 Stainless Steel	Mirror
②	Arm		
③	Hinge Pin		Plain
④	Plate	Zinc Alloy	Chrome
⑤	Pad	Polyethylene	Natural
⑥	Screw	304 Stainless Steel	-