XL-GC SERIES (FOR SLIDING DOORS)

• Installation example: Double bypass doors.
(Refer to order quantity below)

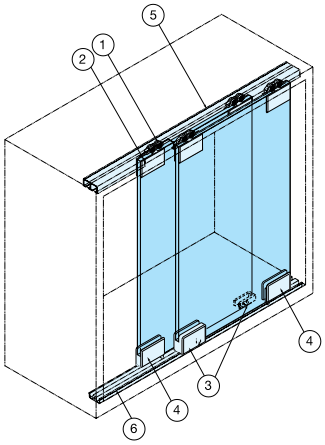

Door Width	Max. 19-11/16" (500 mm)
Door Height	Max. 47-1/4" (1200 mm)
Door Weight	Max. 26.5 lbs (12 kg) / Per Door
Glass Thickness	5/16" (8 mm)

Part Details

Order Quantity	No.	Item No.	Part Name		Dimensions	Description
4 ea	①	57-3149-071	Upper Roller	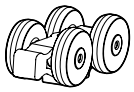	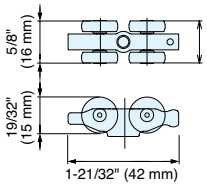	● **Material** Zinc Alloy (Body) Polyacetal (Roller) ● **Finish/Color** Yellow Zinc Chromate (Body) White (Roller)
1 set	②	XL-GC06-C	Upper Bracket		See P.605	● **Material** Zinc Alloy ● **Finish/Color** Chrome *4 pcs per set (for 2 glass doors)
1 ea	③	XL-GC03-C	Lock		See P.605	● **Material** Zinc Alloy ● **Finish/Color** Chrome *24 key changes (2 keys Included)
1 pair	④	XL-GC08-C	Bottom Guide Bracket		See P.605	● **Material** Zinc Alloy ● **Finish/Color** Chrome *1 pair (Left / Right) per set
1 ea	⑤	XL-GC06-UL1200N	Upper Rail	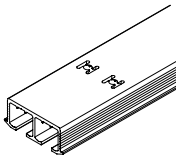	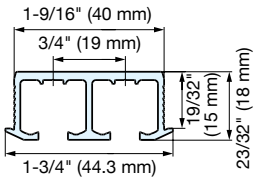	● **Material** Aluminum ● **Finish/Color** Plain *Length: 47-1/4" (1200 mm)
1 ea	⑥	XL-GC03-GL 1200	Bottom Rail		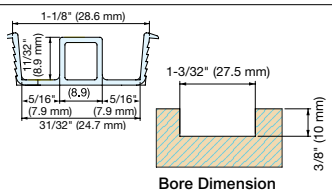	● **Material** ABS ● **Finish/Color** Black *Length: 47-1/4" (1200 mm)