DOOR CLOSER

3.9×19 STEEL

JFR

- Stainless steel hydraulic door closer.
- Bracket arm will catch the roller for self closing at about 10°.
- Silent operation.
- Hydraulic cylinder absorbs shock, preventing the door from slamming shut.
- Easy surface-mount installation, ideal for retrofitting.

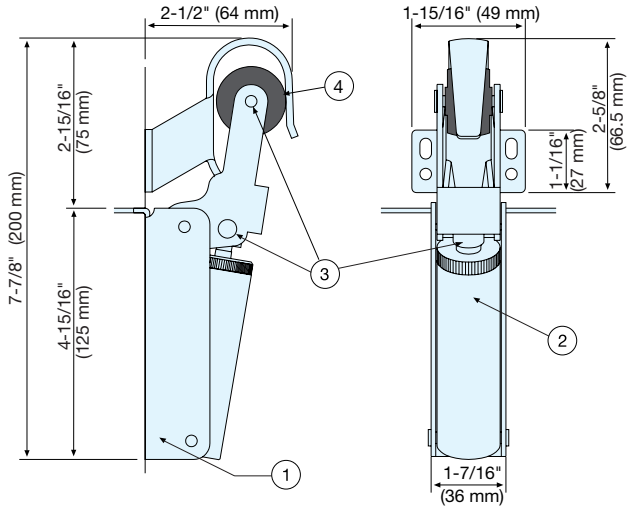

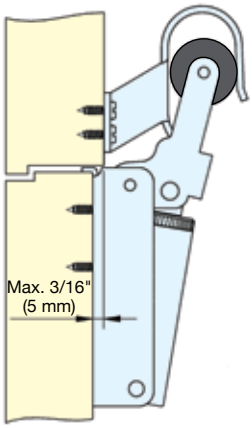

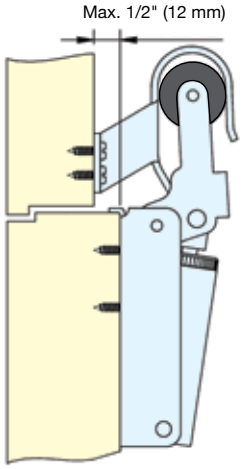

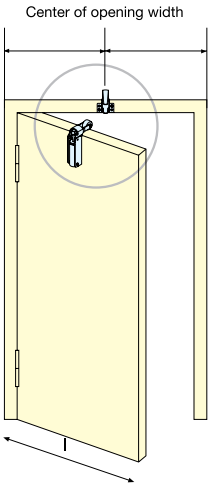

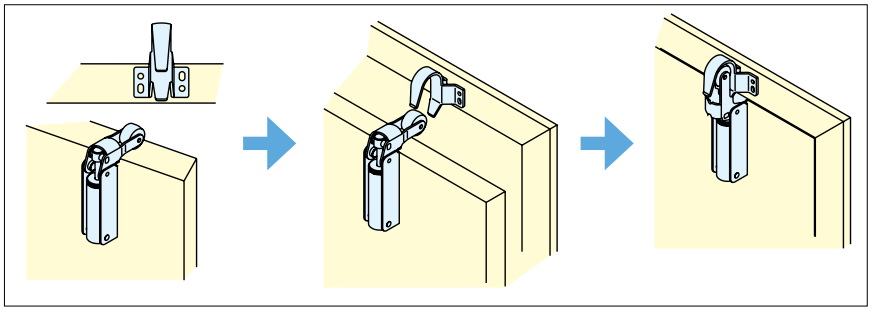

No.	Part Name	Material	Finish/Color
①	Body	304 Stainless Steel	Polished
②	Cylinder	Aluminum	Silver
③	Pin/Shaft	Steel	Plain
④	Roller	Nitrile Butadiene Rubber	Black

Item No.	Door Weight	Weight (g)	Box (pcs)	Carton (pcs)
JFR-021205	Max.176 lbs (80 kg)	598	1	24