SHELF SUPPORT

STAINLESS 304 STEEL | STAINLESS 303 STEEL | STEEL

DSP

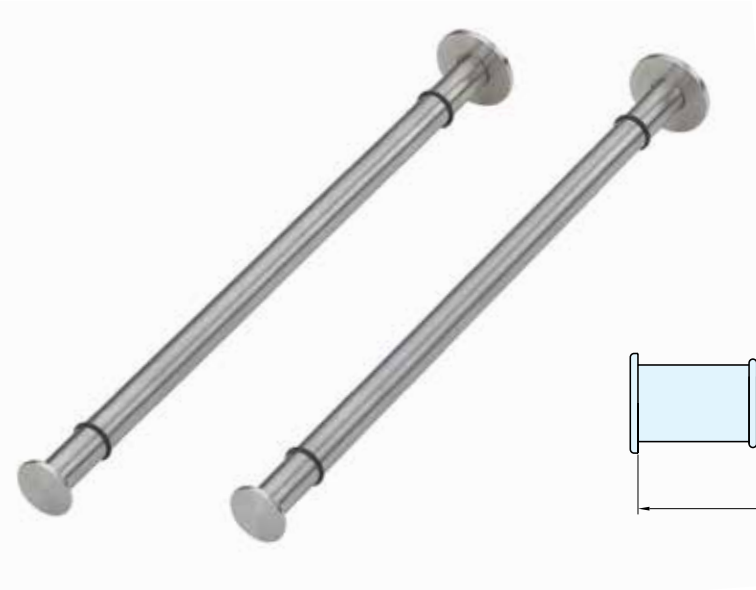

- Supplied with screw and plastic expansion anchor.
- Sold per each.
- Glass not included.
- Not designed for drywall installation.

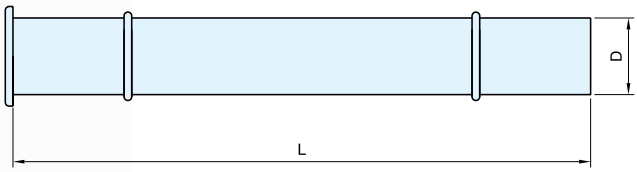

Shelf is not included.

Material	Finish
303/304 Stainless Steel	Satin

Item No.	D	L	Weight (g)	Box (pcs)	Carton (pcs)
DSP-S/12	1/2" (12 mm)	4-3/4" (120 mm)	133	10	100
DSP-S/15	1/2" (12 mm)	5-15/16" (150 mm)	139		
DSP-S/20	1/2" (12 mm)	7-7/8" (200 mm)	184		
DSP-M/15	9/16" (14 mm)	5-15/16" (150 mm)	198		
DSP-M/20	9/16" (14 mm)	7-7/8" (200 mm)	255		
DSP-M/24	9/16" (14 mm)	9-7/16" (240 mm)	306		
DSP-M/30	9/16" (14 mm)	11-13/16" (300 mm)	380		
DSP-L/20	13/16" (20 mm)	7-7/8" (200 mm)	212		
DSP-L/25	13/16" (20 mm)	9-13/16" (250 mm)	238		
DSP-L/30	13/16" (20 mm)	11-13/16" (300 mm)	255		