MULTI-ANGLE LID STAY

STAINLESS 304 STEEL | LOAD CAPACITY 7 kg 15 lbs | STAINLESS

U-3031

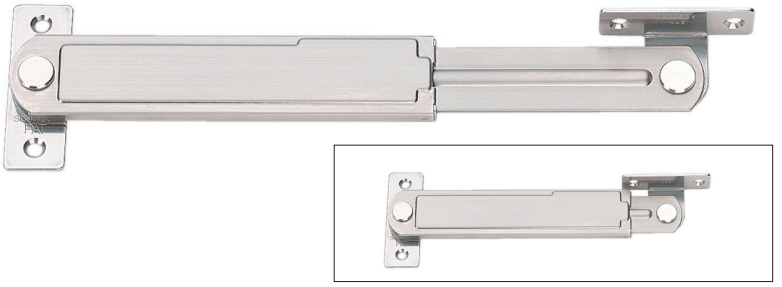

- Ratcheting stay holds flap lid at multiple angles.
- Non-handed.
- Thin and compact design.
- Completely open the door to release lock.
- Completely close the door to re-engage the lock.

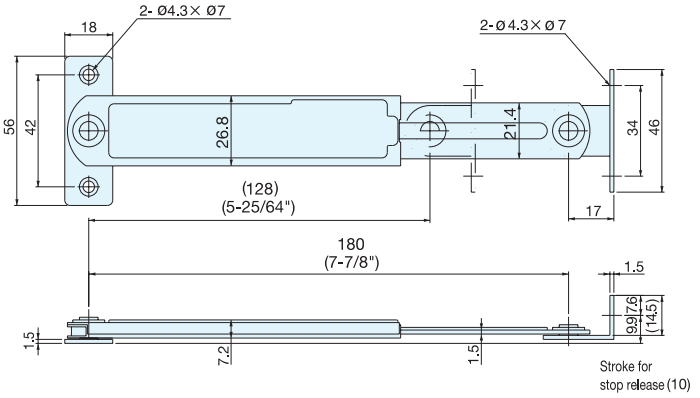

Material	Finish
304 Stainless Steel	Satin

Item No.	Stop Positions	Load Capacity (kg)	Weight (g)	Box (pcs)	Carton (pcs)
U-3031	15	7 (15 lbs)	127	10	100

LID STAY (W/LOCK)

STAINLESS 304 STEEL | LOAD CAPACITY 30 kg 66 lbs | TEST 15 P.698 | NO SCREW

LSP

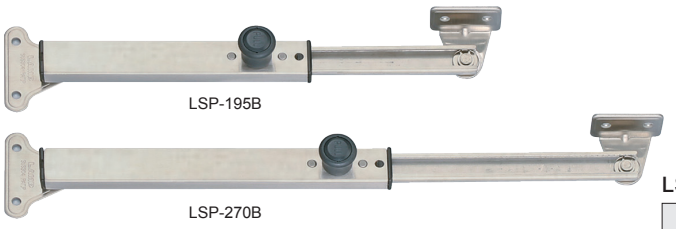

- Automatically locks lid when fully opened.
- Pull the locking knob to release lock.
- Ideal for vibration or shock applications.
- Can be installed individually or in pairs.
- Non-Handed : Can be installed on left or right side.

LSP-195B

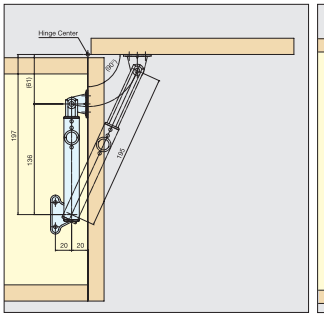

LSP-270B

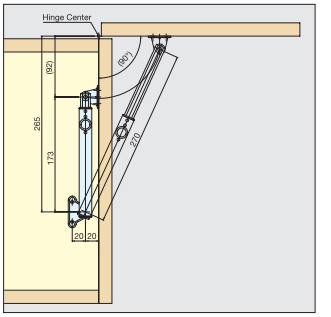

*Lid stay must be installed parallel to the sidewall.

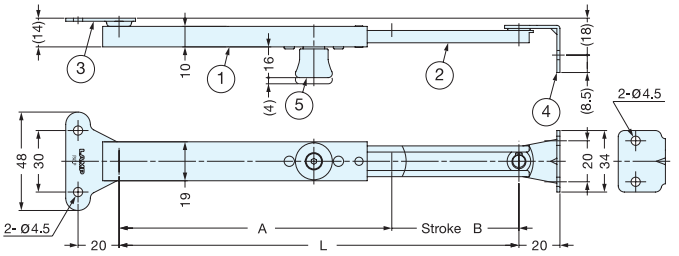

No.	Part Name	Material	Finish/Color
①	Case	304 Stainless Steel	Satin
②	Arm		
③	Case Bracket		
④	Arm Bracket		
⑤	Locking knob	ABS	Dark Grey

Item No.	L	A	B	Load Capacity (kg)	Weight (g)	Box (pcs)	Carton (pcs)
LSP-195B	195 (7-43/64")	133 (5-15/64")	62 (2-7/16")	30 (66 lbs)	126	6	60
LSP-270B	270 (10-5/8")	170 (6-11/16")	100 (3-15/16")		147		